Chapter 1

This chapter has information on the history of control, some examples of control systems, and introduces some vocabulary. We will not cover it in class, but please read it.

Chapter 2 - Mathematical Models of Systems

This chapter begins by highlighting the mathematical equivalence between linear elements in mechanical, electrical, thermal, and fluid systems. See Table 2.1 and 2.2. Rather than memorize these tables, we'll highlight these analogous elements as they occur in our examples.

Linear Approx. of Physical Systems (Sec. 2.3)

Every system is nonlinear. However, we can model most as linear within some (possibly unuseful) range of system state.

Superposition is true for linear systems

If input $x_1(t) \rightarrow$ response $y_1(t)$ and

input $x_2(t) \rightarrow$ response $y_2(t)$ then

$$x_1(t) + x_2(t) \longrightarrow y_1(t) + y_2(t)$$

Homogeneity is also true for linear systems

If input $x(t) \rightarrow$ response $y(t)$ the

input $\beta x(t) \rightarrow$ response $\beta y(t)$

Linear Approx. of Physical Systems (cont.)

Q: Is $y = mx + b$ linear?

Check superposition $y_1 = mx_1 + b$ and $y_2 = mx_2 + b$

$y_1 + y_2 = (mx_1 + b) + (mx_2 + b)$ ✓ Superposition holds

Check homogeneity $\rightarrow$ $y = mx + b$ does $\beta y = m(\beta x) + b$? X Homogeneity does not hold

$y = mx + b$ is not linear (Despite being the equation for a line)

We can approximate this function by a linear version at an operating point (x_0, y_0)

For small changes Δx and Δy, let $x(t) = x_0 + \Delta x$ and $y(t) = y_0 + \Delta y$

Sub into $y = mx + b \rightarrow y_0 + \Delta y = m(x_0 + \Delta x) + b$

$\cancel{y_0} + \Delta y = m\cancel{x_0} + m\Delta x + \cancel{b}$ $\leftarrow$ $y_0 = mx_0 + b$

$\Delta y = m\Delta x$ $\leftarrow$ This is linear

A more-general approach uses Taylor Series expansion:

Let $y(t) = g(x(t))$ $\leftarrow$ response $y(t)$ is a function of $x(t)$. $g(\cdot)$ describes that function

Let's linearize about x_0

$$y = g(x) = g(x_0) + \left.\frac{dg}{dx}\right|_{x=x_0}\left(\frac{x - x_0}{1!}\right) + \left.\frac{d^2g}{dx^2}\right|_{x=x_0}\left(\frac{(x-x_0)^2}{2!}\right) + \dots$$

If $x - x_0$ is small, $(x - x_0) \gg (x - x_0)^2 \gg (x - x_0)^3 \dots$ so we can ignore the higher order terms.

$\left.\frac{dg}{dx}\right|_{x=x_0}$ is the slope of $g(x)$ at $x = x_0$, let $m = \left.\frac{dg}{dx}\right|_{x=x_0}$

Q: What is $g(x_0)$? $\rightarrow$ y_0

So $y = y_0 + m(x - x_0) \rightarrow \underbrace{y - y_0}_{\Delta y} = m\underbrace{(x - x_0)}_{\Delta x}$

$\Delta y = m\,\Delta x$

Linear Approx. of Physical Systems (cont.)

This same method can be applied to higher-order functions/systems.

If $y = g(x_1, x_2, \dots x_n)$

Linearize about $(x_{10}, x_{20}, \dots x_{n0})$ by

$$y = g(x_{10}, x_{20}, \dots x_{n0}) + \frac{\partial g}{\partial x_1}\Big|_{x_1 = x_{10}} (x_1 - x_0) + \frac{\partial g}{\partial x_2}\Big|_{x_2 = x_{20}} (x_2 - x_0) + \dots$$

partial derivatives

Example 2.1

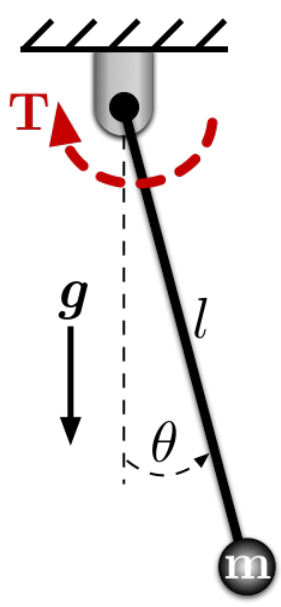

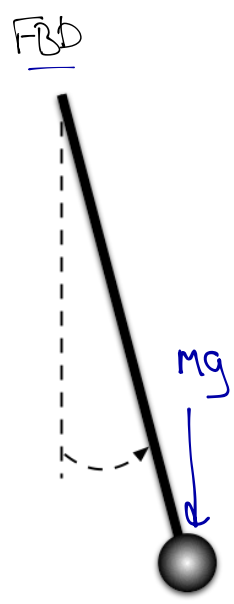

$T = mgl\sin\theta$

Linearize about $\theta_0 = 0^\circ$ equilibrium

$$T - \cancel{T_0}^{\,0} = \frac{\partial(mgl\sin\theta)}{\partial\theta}\Big|_{\theta=\theta_0} (\theta - \theta_0)$$

$$= mgl \frac{\partial \sin\theta}{\partial\theta}\Big|_{\theta=\theta_0} (\theta - \theta_0)$$

$$= mgl \cancel{\cos\theta_0}^{\,1} (\theta - \cancel{\theta_0}^{\,0})$$

So, linearized equation is $T = mgl\theta$

The Laplace Transform (Sec. 2.4)

Probably saw this in Diff Eq. Class

A method to solve diff eq by representing them by easier-to-solve algebraic eq.

Given function $f(t)$ the Laplace Transform is

$$F(s) = \int_{0^-}^{\infty} f(t) e^{-st} dt = \mathcal{L}[f(t)]$$

Inverse Laplace Transform exist too:

$$f(t) = \frac{1}{2\pi j} \int_{\sigma - j\infty}^{\sigma + j\infty} F(s) e^{st} ds$$

Don't worry! In practice we rarely solve these ourselves. Tables exist that have common forms, etc.

Also, we can think of the operation a bit differently.

Define $s \equiv \frac{d}{dt}$ (s is a differential operator)

so $\frac{1}{s} = \int_0^t dt$

Example

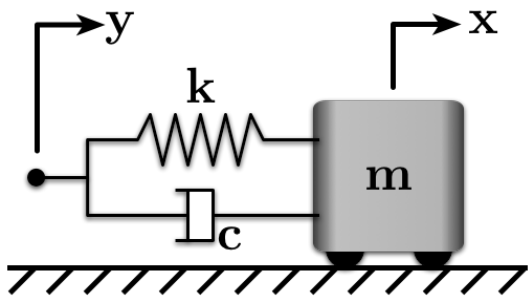

FBD

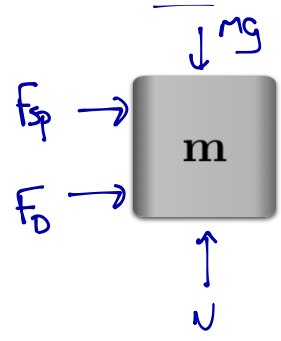

$F_{sp} = k(y-x)$

$F_D = c(\dot{y}-\dot{x})$

$$m\ddot{x} = k(y-x) + c(\dot{y}-\dot{x}) \longrightarrow m\ddot{x} + c\dot{x} + kx = c\dot{y} + ky$$

If we assume 0 initial conditions ($x(0)=0$ and $\dot{x}(0)=0$), then we can write the Laplace transform of this system as

$$m\left(s^2X(s)\right) + c\left(sX(s)\right) + kX(s) = c\left(sY(s)\right) + kY(s)$$

$$\left(ms^2 + cs + k\right)X(s) = \left(cs + k\right)Y(s)$$

$$\frac{X(s)}{Y(s)} = \frac{cs+k}{ms^2+cs+k}$$

$\longleftarrow$ The roots of the numerator are called zeros

$\longleftarrow$ Denominator is the characteristic equation. Its roots are called poles

We can plot the poles and zeros on the s-plane, which will later see can give us a graphical representation of the system.

The poles and zeros are often complex, so the s-plane plot is:

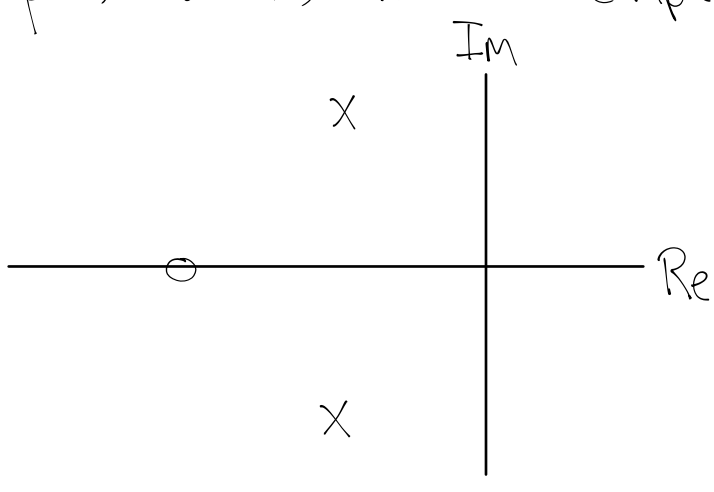

X - poles

O - zeros

The Laplace Transform (cont.)

We could also write the equation of motion (both ODE + Laplace) using

$\zeta \equiv$ damping ratio and $\omega_n \equiv$ natural frequency

Divide eq by m $\rightarrow$ $\ddot{x} + \frac{c}{m}\dot{x} + \frac{k}{m}x = \frac{c}{m}\dot{x} + \frac{k}{m} \rightarrow \ddot{x} + \underbrace{2\zeta\omega_n}_{2\zeta\omega_n = \frac{c}{m}}\dot{x} + \omega_n^2 x = 2\zeta\omega_n\dot{x} + \omega_n^2 x$ $\quad \omega_n^2 = \frac{k}{m}$

$$\frac{X(s)}{Y(s)} = \frac{2\zeta\omega_n s + \omega_n^2}{s^2 + 2\zeta\omega_n s + \omega_n^2}$$

When $\zeta > 1 \rightarrow$ overdamped - roots are real

When $\zeta = 1 \rightarrow$ critically damped - roots are repeated and real

When $\zeta < 1 \rightarrow$ underdamped - roots are complex conj. pairs

So, the pole location can give us a lot of info about system response!!!

Overdamped

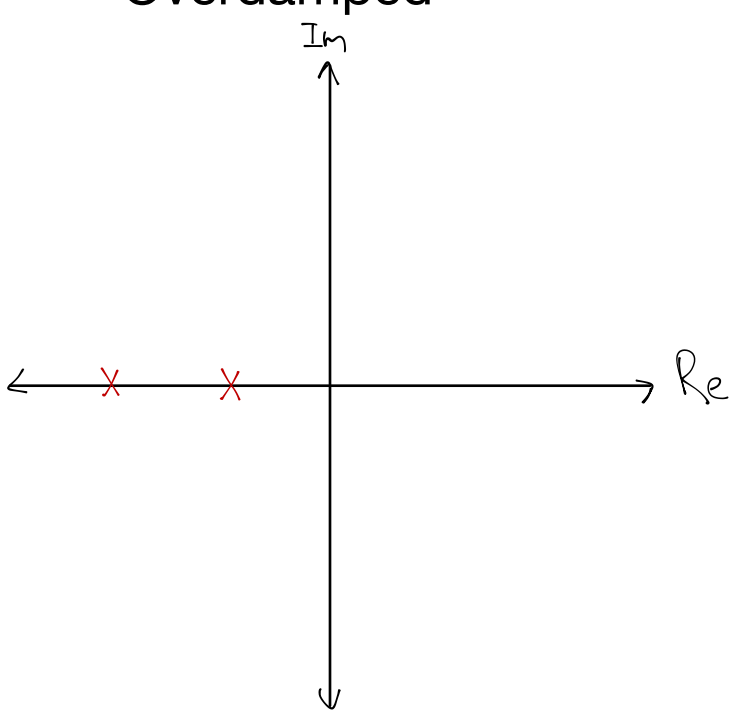

Underdamped

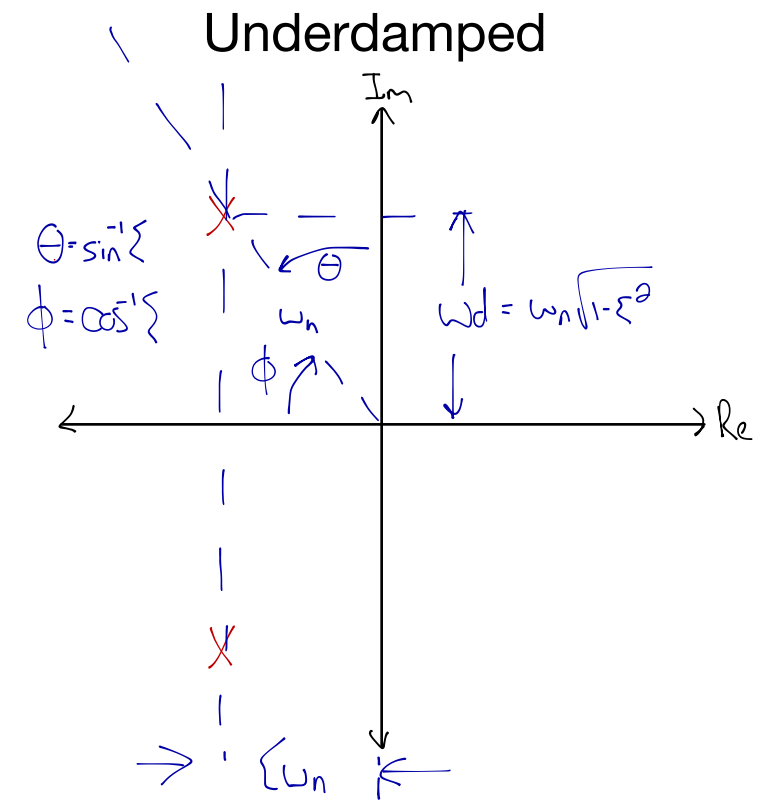

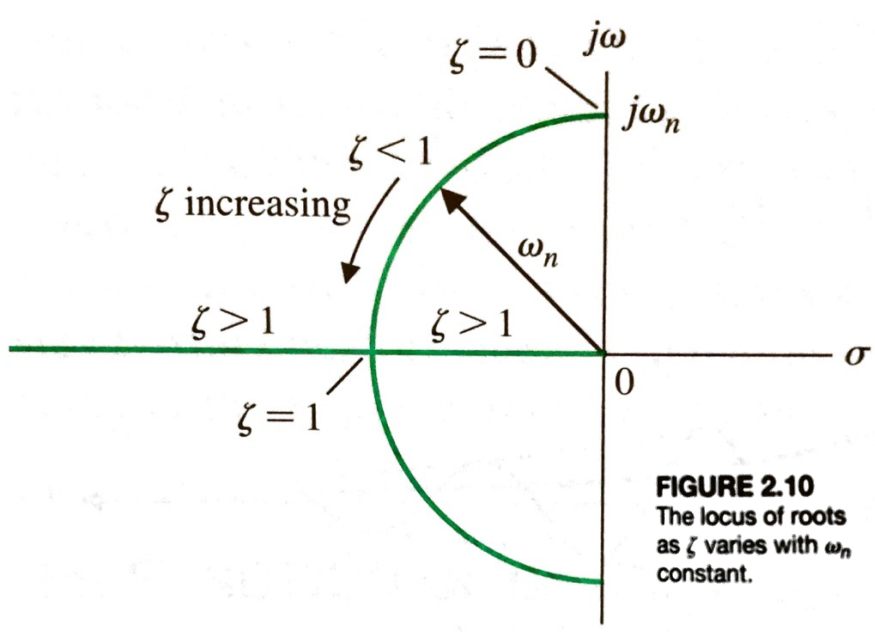

FIGURE 2.10 The locus of roots as ζ varies with ω_n constant.

Example Responses

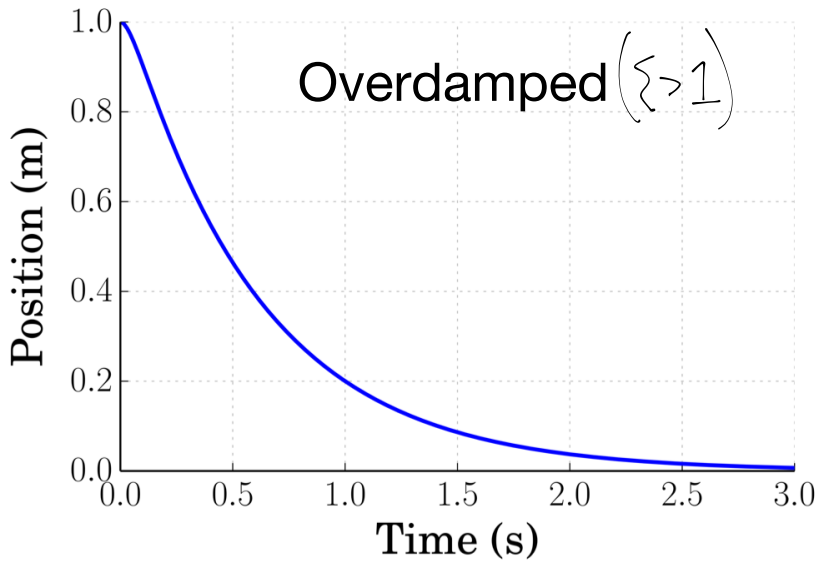

Underdamped ($0 < \zeta < 1$)

The decay envelope is described by $e^{-\zeta\omega_n t}$

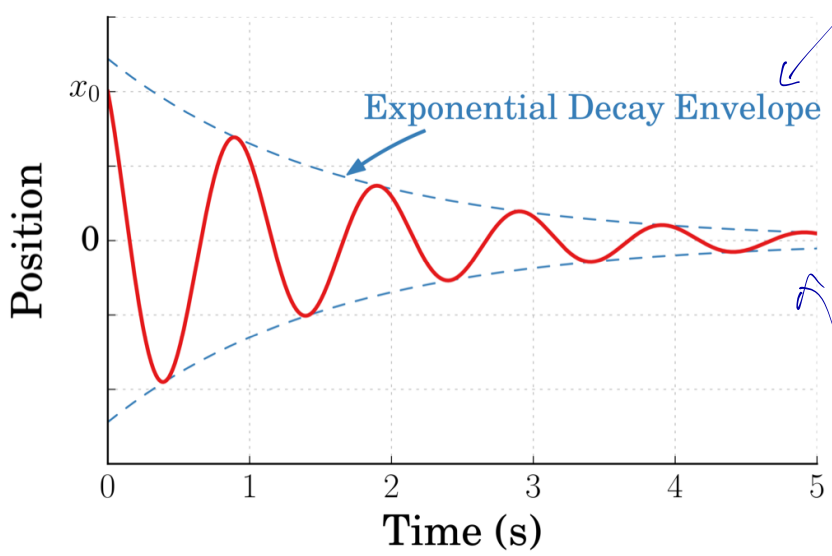

$x(0) = x_0 \qquad \dot{x}(0) = 0$

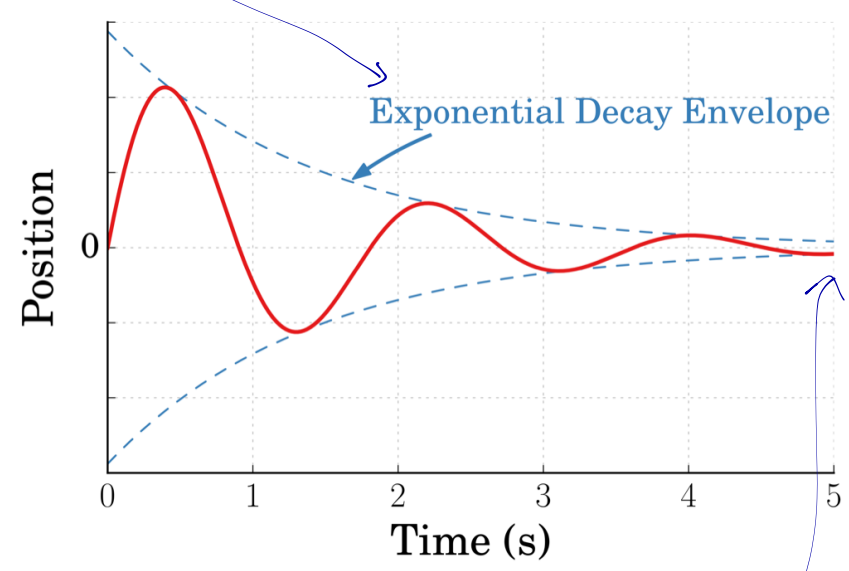

$x(0) = 0 \qquad \dot{x}(0) \neq 0$

Decays toward 0

We'll come back to why the decay envelope is exponential soon.

The Transfer Function of Linear Systems (Sec. 2.5)

Let's look back at our example system

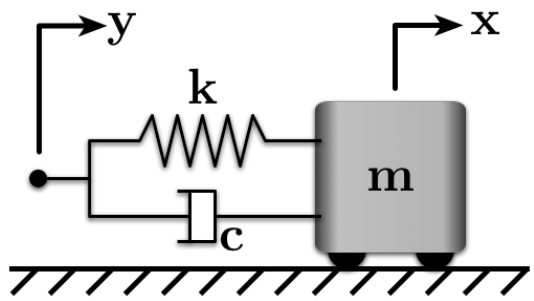

$$m\ddot{x} + c\dot{x} + kx = c\dot{y} + ky$$

or

$$\ddot{x} + 2\zeta\omega_n\dot{x} + \omega_n^2 x = 2\zeta\omega_n\dot{y} + \omega_n^2$$

Taking the Laplace Transform, assuming 0 initial cond, we found

$$(ms^2 + cs + k)X(s) = (cs + k)Y(s) \quad \text{or} \quad (s^2 + 2\zeta\omega_n s + \omega_n^2)X(s) = (2\zeta\omega_n s + \omega_n^2)Y(s)$$

We wrote

$$\frac{X(s)}{Y(s)} = \frac{cs + k}{ms^2 + cs + k} = \frac{2\zeta\omega_n s + \omega_n^2}{s^2 + 2\zeta\omega_n s + \omega_n^2} = \frac{\text{output}}{\text{input}}$$

The Transfer Function is the ratio of output to input

This relationship describes the dynamics of the system.

Most (all?) controls analysis/design software packages will let you define your system by simply entering the transfer function.